THIS DOCUMENT IS TRUE AND CORRECT AT TIME OF PUBLICATION. CONTINUED PRODUCT IMPROVEMENTS MAKE SPECIFICATIONS AND MEASUREMENTS SUBJECT TO CHANGE WITHOUT NOTICE.

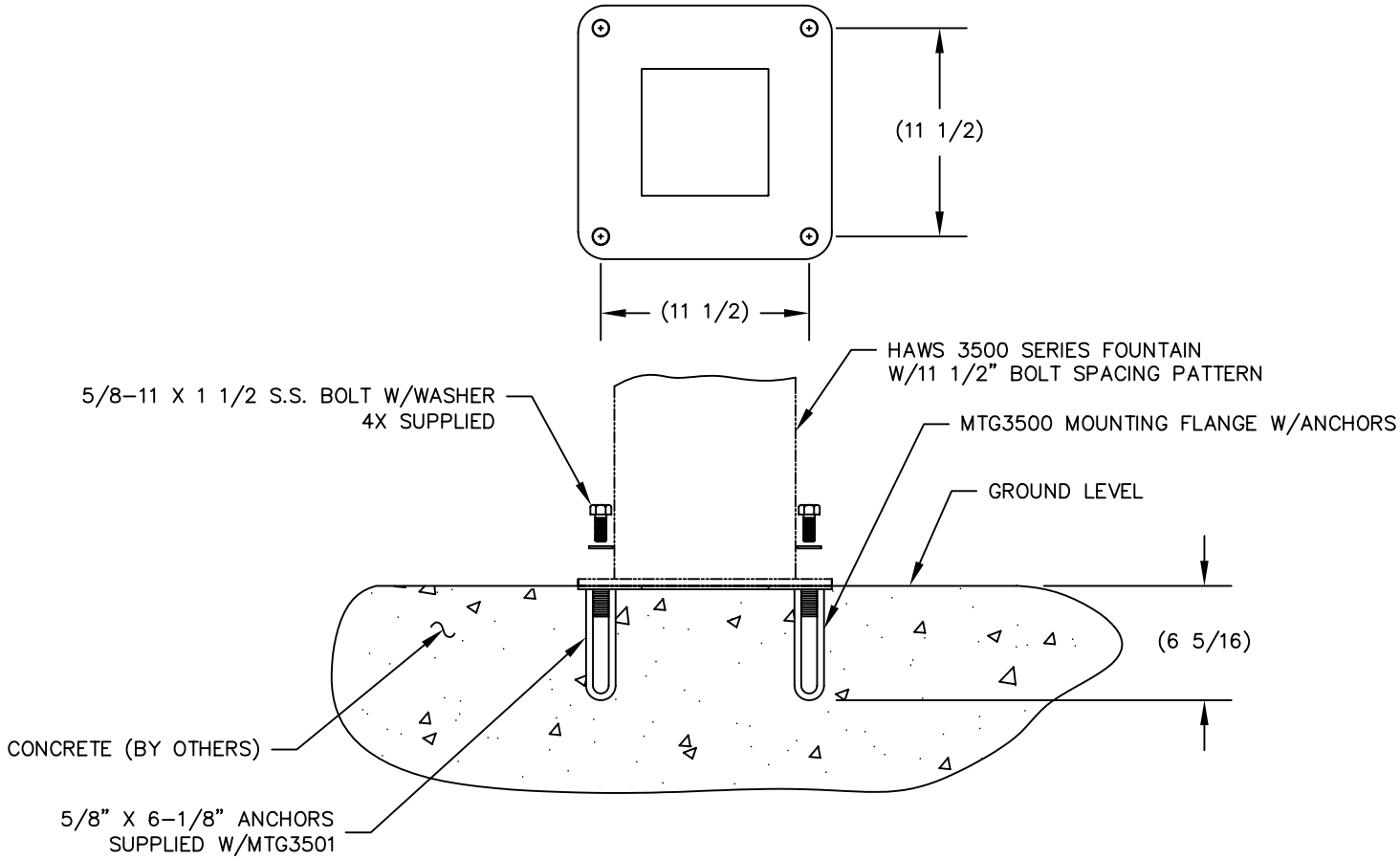

MODEL MTG3501
IS LESS THE MOUNTING FLANGE

DWG. NO. 14056C00

haws corporation
INFO FAX : 1-888-FAX-HAWS (1-888-329-4297)
1455 Kleppe Ln, Sparks NV, 89431
Phone: 775-359-4712 Fax: 775-359-7424
Haws Ag Bachweg 3 CH-3401 Burgdorf Switzerland
Haws Mfg Pte Ltd 74 Sungei Kadut Loop Singapore 729531
e-mail: Haws@hawsco.com website: www.hawsco.com

REVISED PER ECN: 2603	BY:	APVD:	TITLE: MOUNTAING SYSTEM
DRAWN: P MCMULLEN	3/99		MODEL: MTG3500/MTG3501
APPROVED:			INFO FAX DOC #: 26843500/26843501
			SCALE: 1:1 DRAWING TYPE: INSTALLATION/FAXBACK

PART NUMBER:	00020774 54
DRAWING NUMBER:	14056C00
REV.	1
SIZE: A	SHT. 1 OF 1